(ENGINEERS)

SUBMITTAL DATA

Conventional Roof Curb with Pipe Flashing

Model: UCC- * VERTICAL PIPE CURB

Conventional Roof Curb with vertical pipe flashing and cover

Additional Options:

1.
2.
3.
4.

Standard Construction:

One-piece curb with 18 ga. Galvanized steel shell and baseplate; 18 ga cover with vertical pipe portal; available in *UCC-1, 2 , 3 , & 5 models.

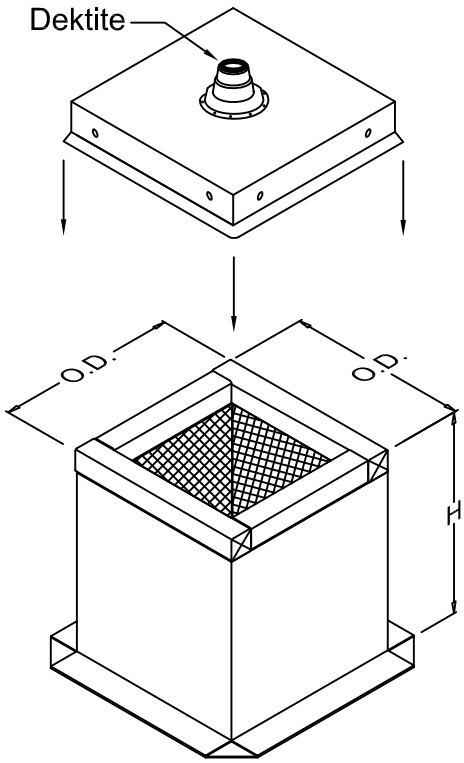

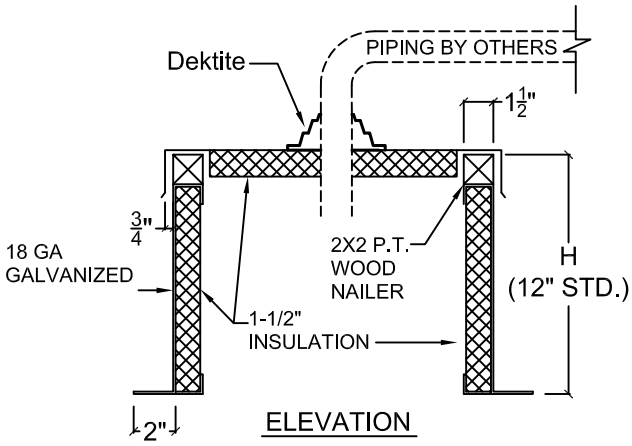

ELEVATION
(Model UCC-3 shown)

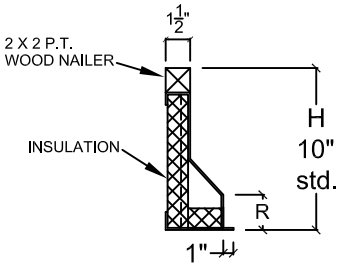

UCC-1 SECTION

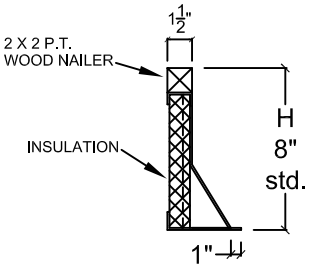

UCC-2 SECTION

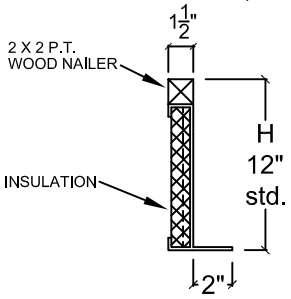

UCC-3 SECTION

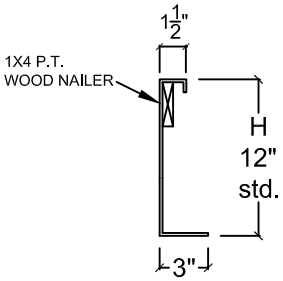

UCC-5 SECTION

NOTE: Due to continuing research, United Enertech reserves the right to change specifications without notice.

Qty.	Model	I.D.	O.D.	H	R (UCC-1 only)	Dektite Size	Dektite Qty.	Roof Slope	Tag (Description)

DRAWN BY:	DATE:	REV. NO.	REV. DATE:	APPROVED BY:	DWG. NO.:
CLJ	9-26-06	4	1-4-11	CBY	M-14